





Haley Chance
Work Order 1201

WWBeds
Custom Furniture

It's like having your own shop!

Drawn By: Chris Davis

Last Modified: December 4, 2023



Haley Chance
Work Order 1201

WWBeds
Custom Furniture

It's like having your own shop!

Drawn By: Chris Davis

Last Modified: December 4, 2023

Haley Chance
Work Order 1201
Wood: Oak
Color: Classic Gray
Size: Queen
Hardware: Nickel Knobs



1 1 4"d Knob
Nickel

Info Page	WWBeds Custom Furniture It's like having your own shop! Haley Chance Work Order 1201	REVISIONS MM/DD/YY / REMARKS 1 11/28/23 Updated hardware, make base cutout larger, 2 removed HB outlet, changed depth to normal, 3 noted tray and modified base 4 Added outlet in base 5 11/28/23 Updated working on headboard

A 02

Haley Chance
Work Order 1201

Size: Queen

Wood: Oak

Color: Classic Gray

Hardware: Nickel Knobs

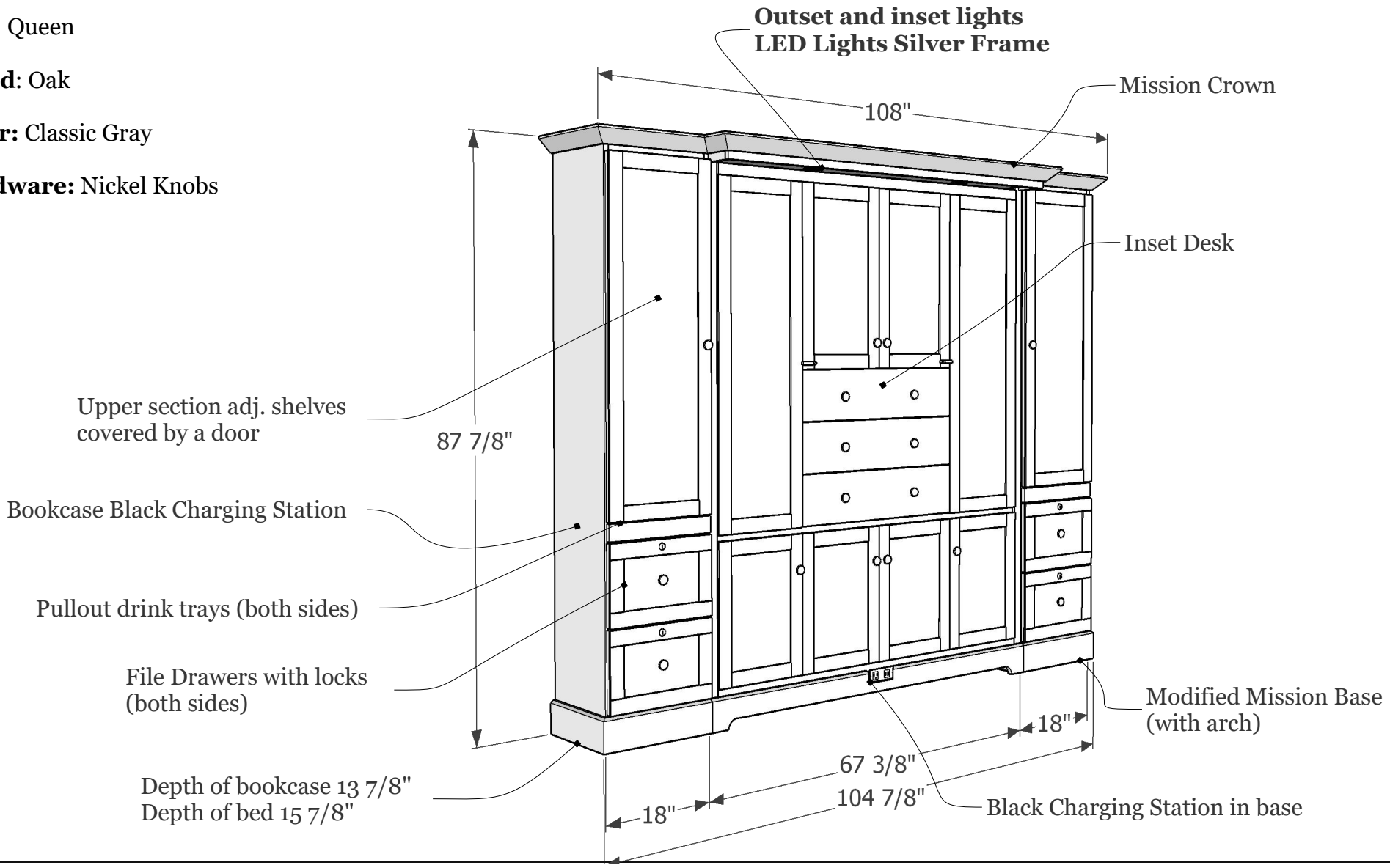

Main Drawing with Measurements

WWBeds Custom Furniture
It's like having your own shop!

Haley Chance
Work Order 1201

REVISIONS

	MM/DD/YY	REMARKS
1	11/28/23	Updated hardware, make base cutout larger,
2		removed HB outlet, changed depth to normal,
3		noted tray and modified base
4		Added outlet in base
5	11/28/23	Updated working on headboard

03

A

Haley Chance
Work Order 1201
Queen
Classic Gray

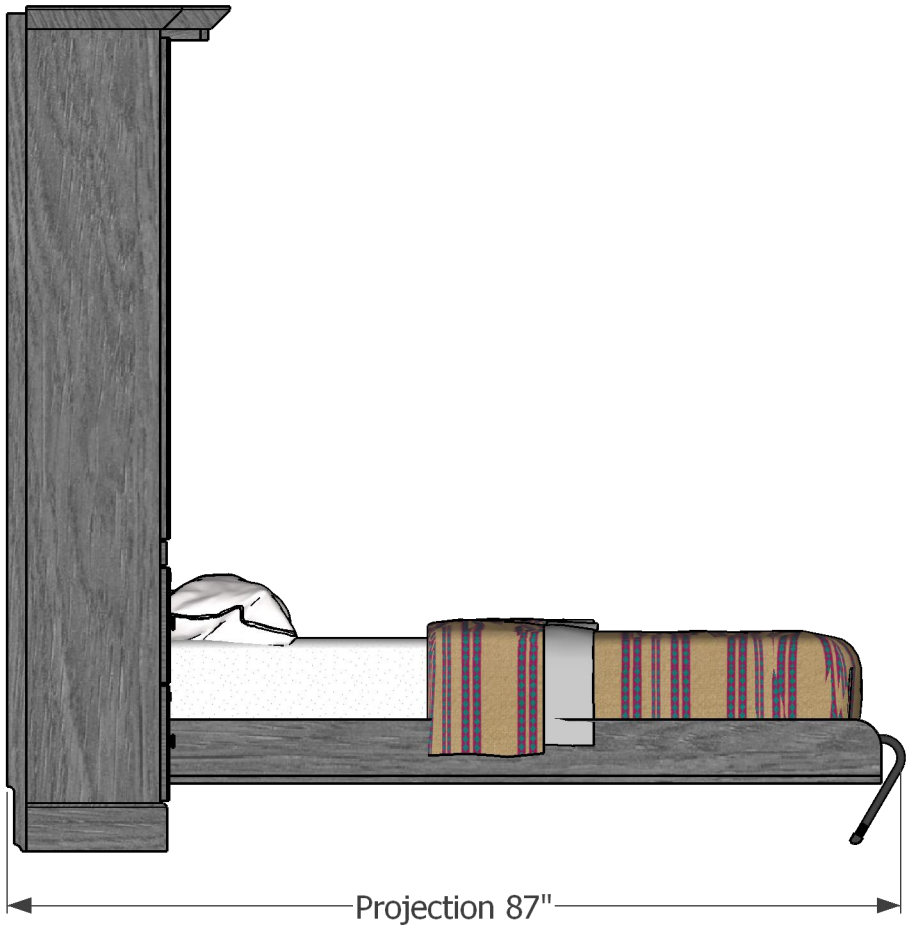

Drawing Projection

WWBeds
Custom Furniture
It's like having your own shop!

Haley Chance
Work Order 1201

REVISIONS

	MM/DD/YY	REMARKS
1	11/28/23	Updated hardware, make base cutout larger,
2		removed HB outlet, changed depth to normal,
3		noted tray and modified base
4		Added outlet in base
5	11/28/23	Updated working on headboard

04

A



Face Closed

WWBeds
Custom Furniture
It's like having your own shop!

Haley Chance
Work Order 1201

REVISIONS

	MM/DD/YY	REMARKS
1	11/28/23	Updated hardware, make base cutout larger,
2		removed HB outlet, changed depth to normal,
3		noted tray and modified base
4		Added outlet in base
5	11/28/23	Updated working on headboard

A 05



Desk Out

WWBeds
Custom Furniture
It's like having your own shop!

Haley Chance
Work Order 1201

REVISIONS

	MM/DD/YY	REMARKS
1	11/28/23	Updated hardware, make base cutout larger,
2		removed HB outlet, changed depth to normal,
3		noted tray and modified base
4		Added outlet in base
5	11/28/23	Updated working on headboard

A 06



Face Open

WWBeds
Custom Furniture
It's like having your own shop!

Haley Chance
Work Order 1201

REVISIONS

	MM/DD/YY	REMARKS
1	11/28/23	Updated hardware, make base cutout larger,
2		removed HB outlet, changed depth to normal,
3		noted tray and modified base
4		Added outlet in base
5	11/28/23	Updated working on headboard

A 07

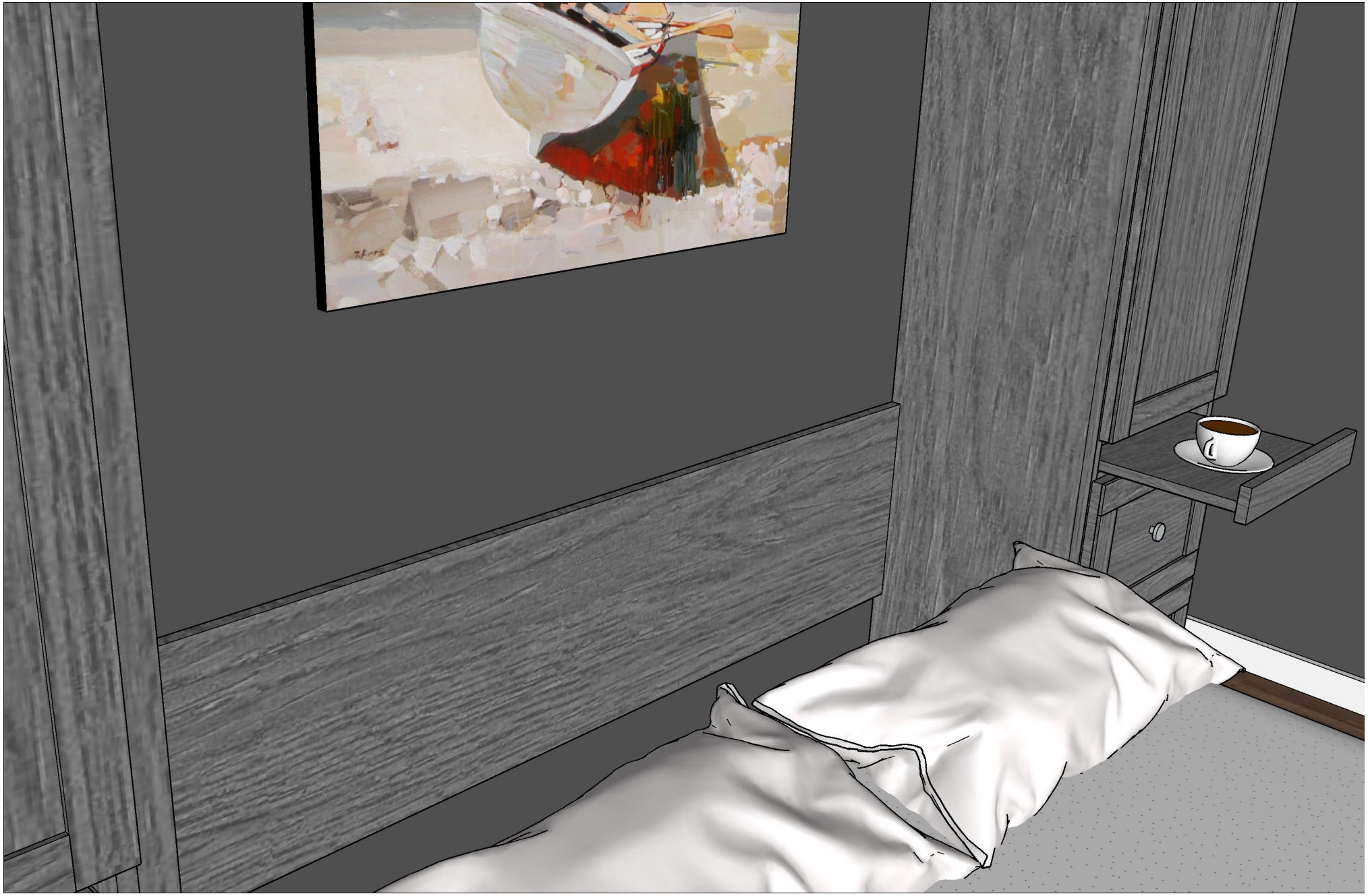

Standard headbaord

WWBeds
Custom Furniture
It's like having your own shop!

Haley Chance
Work Order 1201

REVISIONS

	MM/DD/YY	REMARKS
1	11/28/23	Updated hardware, make base cutout larger,
2		removed HB outlet, changed depth to normal,
3		noted tray and modified base
4		Added outlet in base
5	11/28/23	Updated working on headboard

A 08

Base Molding Cutout

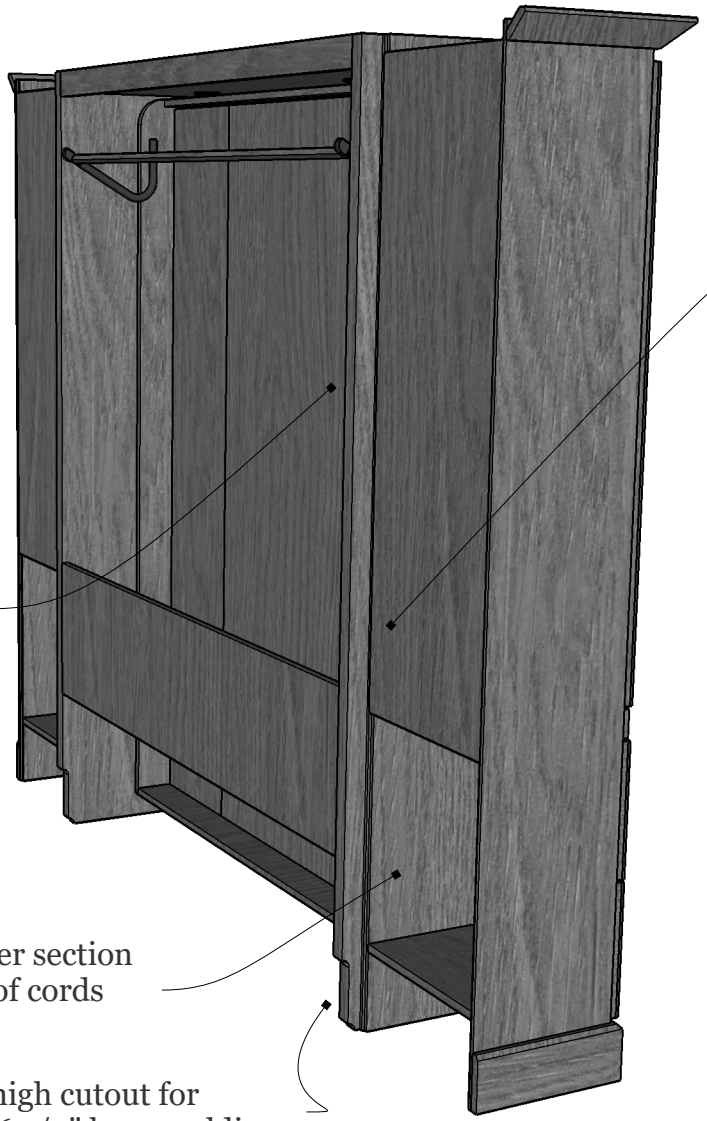

Bookcase is spaced a couple inches away from wall to allow for wiring.

Bed will sit flush with back wall

Back left off drawer section to make running of cords easier.

6 3/4" high cutout for room's 6 1/2" base molding

Base cutout

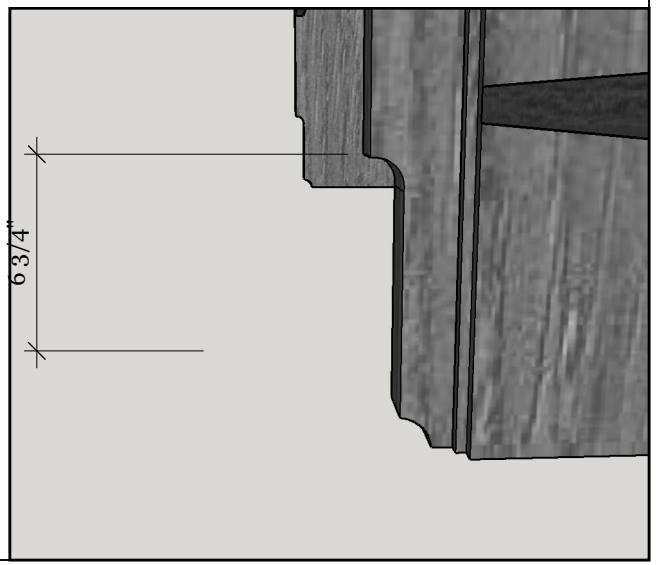

Base Molding Cutout	WWBeds Custom Furniture It's like having your own shop! Haley Chance Work Order 1201	REVISIONS MM/DD/YY — REMARKS 1 11/28/23 Updated hardware, make base cutout larger, 2 removed HB outlet, changed depth to normal, 3 noted tray and modified base 4 Added outlet in base 5 11/28/23 Updated working on headboard

09 A



Drink Trays

WWBeds
Custom Furniture
It's like having your own shop!

Haley Chance
Work Order 1201

REVISIONS

	MM/DD/YY	REMARKS
1	11/28/23	Updated hardware, make base cutout larger,
2		removed HB outlet, changed depth to normal,
3		noted tray and modified base
4		Added outlet in base
5	11/28/23	Updated working on headboard

10

A

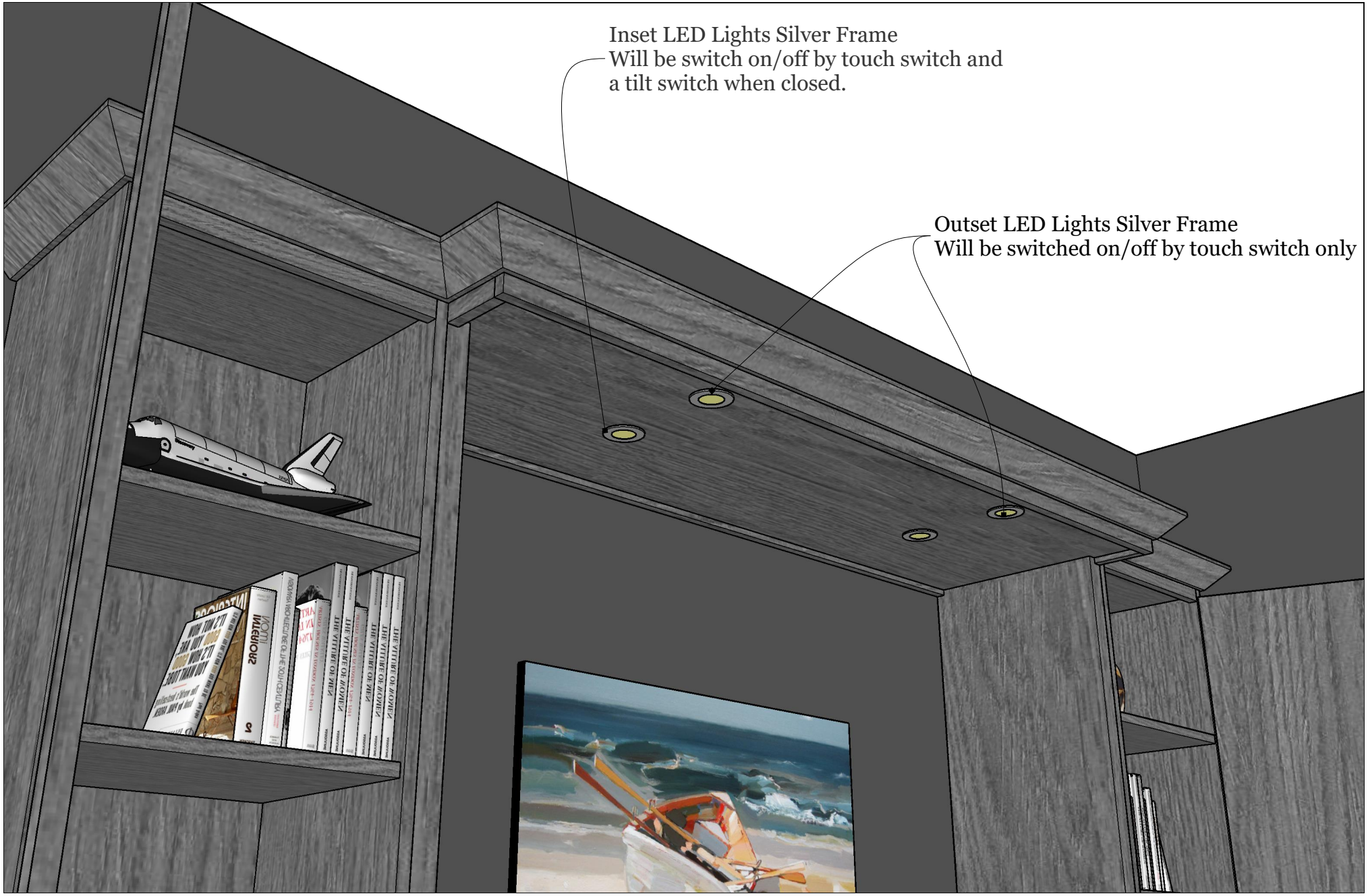

Lights

WWBeds
Custom Furniture
It's like having your own shop!

Haley Chance
Work Order 1201

REVISIONS

	MM/DD/YY	REMARKS
1	11/28/23	Updated hardware, make base cutout larger,
2		removed HB outlet, changed depth to normal,
3		noted tray and modified base
4		Added outlet in base
5	11/28/23	Updated working on headboard

11

A



Bookcase Open

WWBeds
Custom Furniture
It's like having your own shop!

Haley Chance
Work Order 1201

REVISIONS

	MM/DD/YY	REMARKS
1	11/28/23	Updated hardware, make base cutout larger,
2		removed HB outlet, changed depth to normal,
3		noted tray and modified base
4		Added outlet in base
5	11/28/23	Updated working on headboard

12

A



Bookcase Charging Station

WWBeds
Custom Furniture
It's like having your own shop!

Haley Chance
Work Order 1201

REVISIONS

	MM/DD/YY	REMARKS
1	11/28/23	Updated hardware, make base cutout larger,
2		removed HB outlet, changed depth to normal,
3		noted tray and modified base
4		Added outlet in base
5	11/28/23	Updated working on headboard

13

A

More Extras

More extras can be added to your murphy bed design. Examples of those can be found at:
www.wwbeds.com/murphy-bed-extras



More Extras

WWBeds Custom Furniture
It's like having your own shop!

Haley Chance
Work Order 1201

REVISIONS		
	MM/DD/YY	REMARKS
1	11/28/23	Updated hardware, make base cutout larger,
2		removed HB outlet, changed depth to normal,
3		noted tray and modified base
4		Added outlet in base
5	11/28/23	Updated working on headboard

Build | White Board

Size: Queen **Wood**: Oak **Color:** Classic Gray

Haley Chance
Work Order 1201

CNC Changes

_____
_____
_____
_____
_____
_____
_____
_____



Haley Chance
Work Order 1201

Size: Queen

Wood: Oak

Color: Classic Gray

Hardware: Nickel Knobs

Build Department

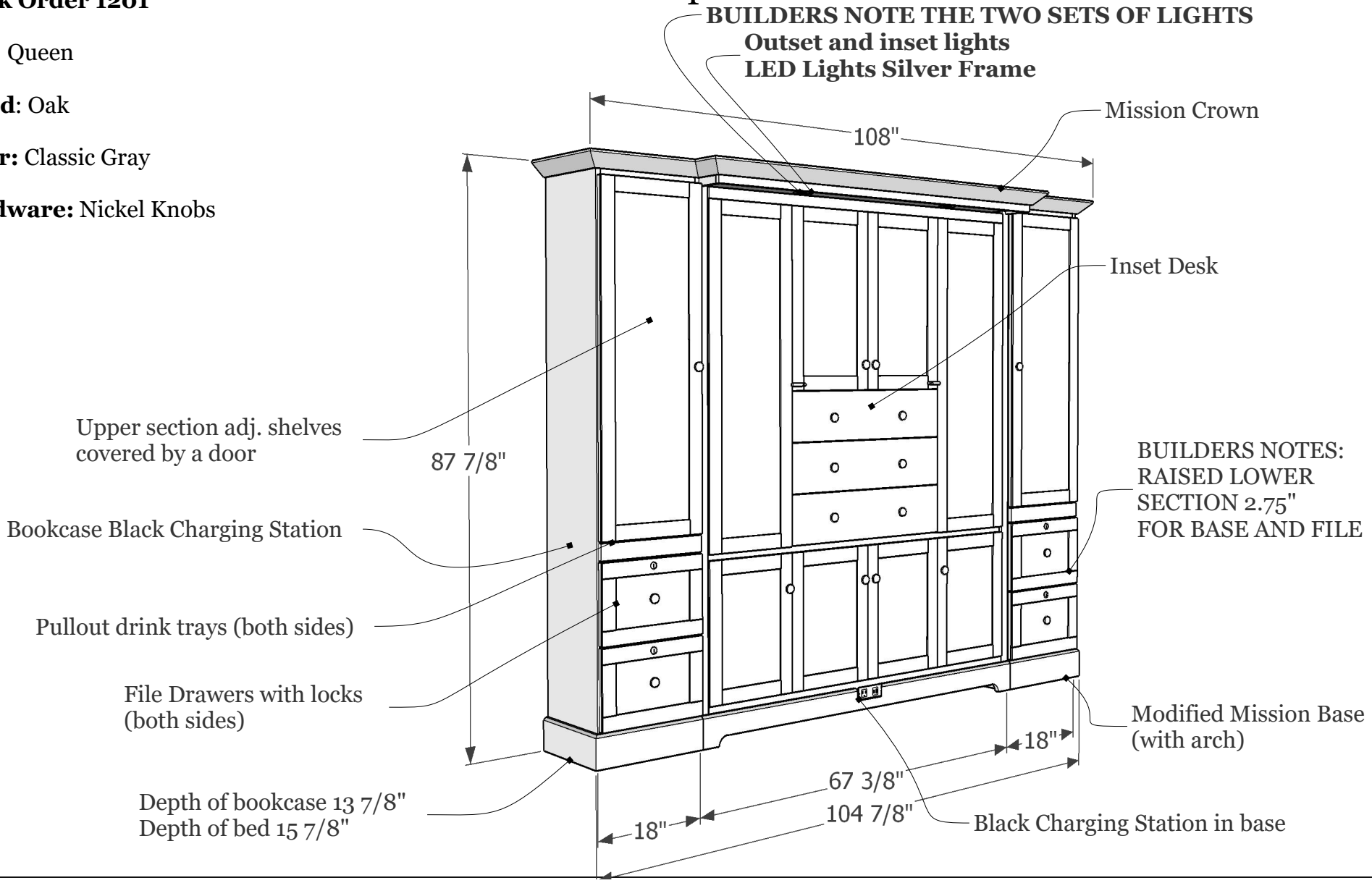

Build Department	WWBeds Custom Furniture It's like having your own shop! Haley Chance Work Order 1201	REVISIONS

	MM/DD/YY	REMARKS
1	11/28/23	Updated hardware, make base cutout larger,
2		removed HB outlet, changed depth to normal,
3		noted tray and modified base
4		Added outlet in base
5	11/28/23	Updated working on headboard

16

A

Haley Chance
Work Order 1201
Queen
Classic Gray

Build Assembly Department

Hardware: Nickel Knobs

Face Hardware (Leg):
Up/Down (4" from bottom of leg

Left/Right Centered on molding.

Face Hardware (Drawer Fronts):
Up/down: Centered
Left/Right: 8" (double check) Normally 1/4" width

Top Door Hardware:
Up/down: Centered

Left/Right: Centered on molding.

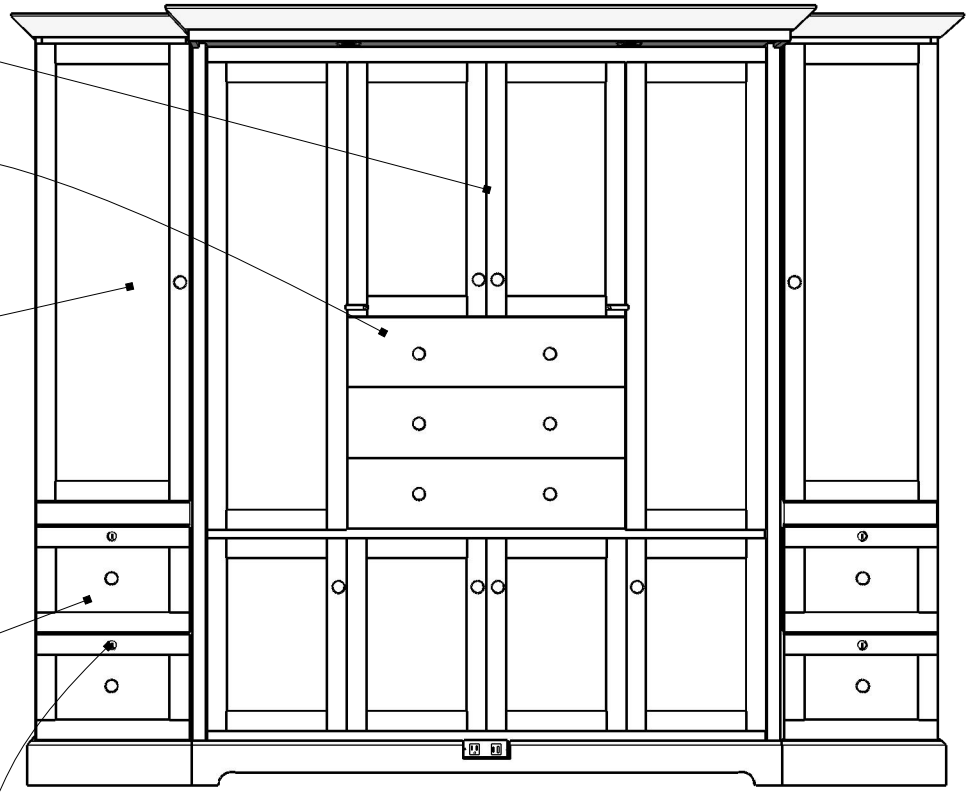

Drawers:
Up/down: Centered
Left/Right: Centered

Locks in
all drawers

Build Hardware

WWBeds
Custom Furniture
It's like having your own shop!

Haley Chance
Work Order 1201

REVISIONS

	MM/DD/YY	REMARKS
1	11/28/23	Updated hardware, make base cutout larger,
2		removed HB outlet, changed depth to normal,
3		noted tray and modified base
4		Added outlet in base
5	11/28/23	Updated working on headboard

17

A

Haley Chance
Work Order 1201
Queen
Classic Gray

Build Assembly Department

Hardware: Nickel Knobs

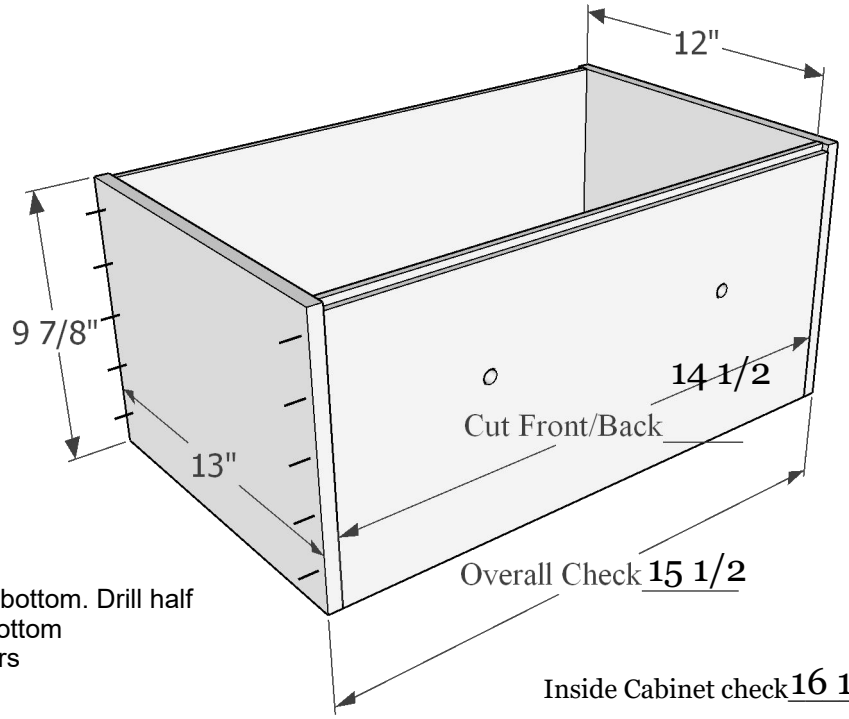

Drawer parts

1/2" Material					
Front/Back	8	14 1/2	X	9 7/8	Inside (on right) Dado top and bottom. Drill half
Sides	8	13	X	9 7/8	Outside (On left/Glue) Dado Bottom
Divider for file					No divider on 13" deep drawers
1/4" Material					
Bottoms	4	15	X	12 1/2	
Backs 2	56 1/4	X	17 1/4		

Build Drawer Box

WWBeds Custom Furniture
It's like having your own shop!

Haley Chance
Work Order 1201

REVISIONS

	MM/DD/YY	REMARKS
1	11/28/23	Updated hardware, make base cutout larger,
2		removed HB outlet, changed depth to normal,
3		noted tray and modified base
4		Added outlet in base
5	11/28/23	Updated working on headboard

Haley Chance
Work Order 1201

Build Checklist

Phase 1

Piston with Inset Desk

☐	1	Center Section
☐	1	Desk Section
☐	1	Leg for Desk
☐	2	Verticals
☐	1	3/4" x 3/4" Leg
☐	1	Headboard (on legs?)
☐	1	Header NO BED STOP ON PISTION (on legs?)
☐	1	1/4" Mattress Support (Center/finished)
☐	1 or 2	1/4" Mattress Support (Unfinished parts)
☐	1	Crown Molding
☐	1	Base Molding (with elect. cutout)
☐		Hardware Holes Drilled?
☐		Base cutout?
☐		2 SETS OF LIGHTS CUT (INSET AND OUTSET)?
☐		
☐		
☐		
☐		Ready to finish?

Signed off by:_____

Phase 2

Bookcases

☐	2	Cabinets
☐	2	Backs
☐	2	Doors
☐	2	Trays
☐	4	Drawer Fronts (with lock holes)
☐	6	Adj. Shelves
☐	1	Crown Molding
☐	1	Base Molding (connected)
☐		Charging Station cut (on left)

DOUBLE CHECK THE CHARGING STATION THE WORK ORDER HAD 1 BUT THE DRAWING SHOWED 2 ON A PAGE.

☐	Are Drawer Boxes Cut?
☐	Hardware Holes Drilled?
☐	
☐	
☐	
☐	Ready to finish?

Signed off by:_____

Haley Chance
Work Order 1201

Size: Queen

Wood: Oak

Color: Classic Gray

Hardware: Nickel Knobs

Finish Department

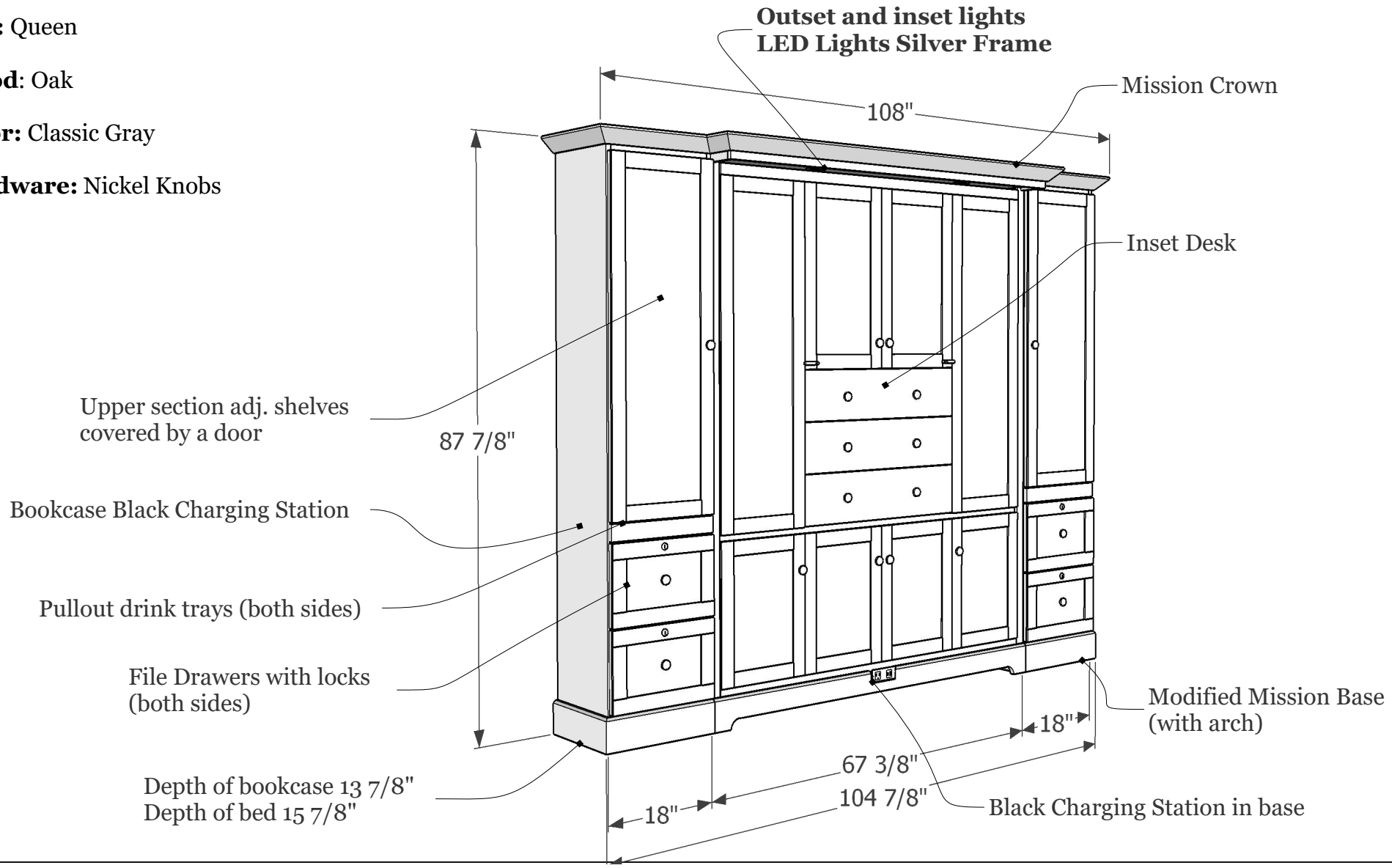

Finish Department	WWBeds Custom Furniture It's like having your own shop! Haley Chance Work Order 1201	REVISIONS MM/DD/YY / REMARKS 1 11/28/23 Updated hardware, make base cutout larger, 2 removed HB outlet, changed depth to normal, 3 noted tray and modified base 4 Added outlet in base 5 11/28/23 Updated working on headboard

Haley Chance
Work Order 1201

Finish Checklist

Phase 1

Piston with Inset Desk

☐	1	Center Section
☐	1	Desk Section
☐	1	Leg for Desk
☐	2	Verticals
☐	1	3/4" x 3/4" Leg
☐	1	Headboard (on legs?)
☐	1	Header NO BED STOP ON PISTION (on legs?)
☐	1	1/4" Mattress Support (Center/finished)
☐	1 or 2	1/4" Mattress Support (Unfinished parts)
☐	1	Crown Molding
☐	1	Base Molding (with elect. cutout)
☐		Hardware Holes Drilled?
☐		Base cutout?
☐		2 SETS OF LIGHTS CUT (INSET AND OUTSET)?
☐		
☐		
☐		
☐		Ready to finish?

Signed off by:_____

Phase 2

Bookcases

☐	2	Cabinets
☐	2	Backs
☐	2	Doors
☐	2	Trays
☐	4	Drawer Fronts (with lock holes)
☐	6	Adj. Shelves
☐	1	Crown Molding
☐	1	Base Molding (connected)
☐		Charging Station cut (on left)

DOUBLE CHECK THE CHARGING STATION THE WORK ORDER HAD 1 BUT THE DRAWING SHOWED 2 ON A PAGE.

☐	Are Drawer Boxes Cut?
☐	Hardware Holes Drilled?
☐	
☐	
☐	
☐	Ready to finish?

Signed off by:_____

Finish Checklist	WWBeds Custom Furniture It's like having your own shop!	REVISIONS
	Haley Chance Work Order 1201	

	MM/DD/YY	REMARKS
1	11/28/23	Updated hardware, make base cutout larger,
2		removed HB outlet, changed depth to normal,
3		noted tray and modified base
4		Added outlet in base
5	11/28/23	Updated working on headboard

21

A

Haley Chance
Work Order 1201
Queen
Classic Gray

Final Assembly/Boxing

Hardware: Nickel Knobs

Black Charging Station (all)

Headboard Silver Plate

NOTE: 2 sets of lights (outset and inset)
-2 cords running up verticals
-Inset with tilt switch
-Outset Extension

Bed
LED Lights Silver Frame

2nd Plate Location (Silver Plate)

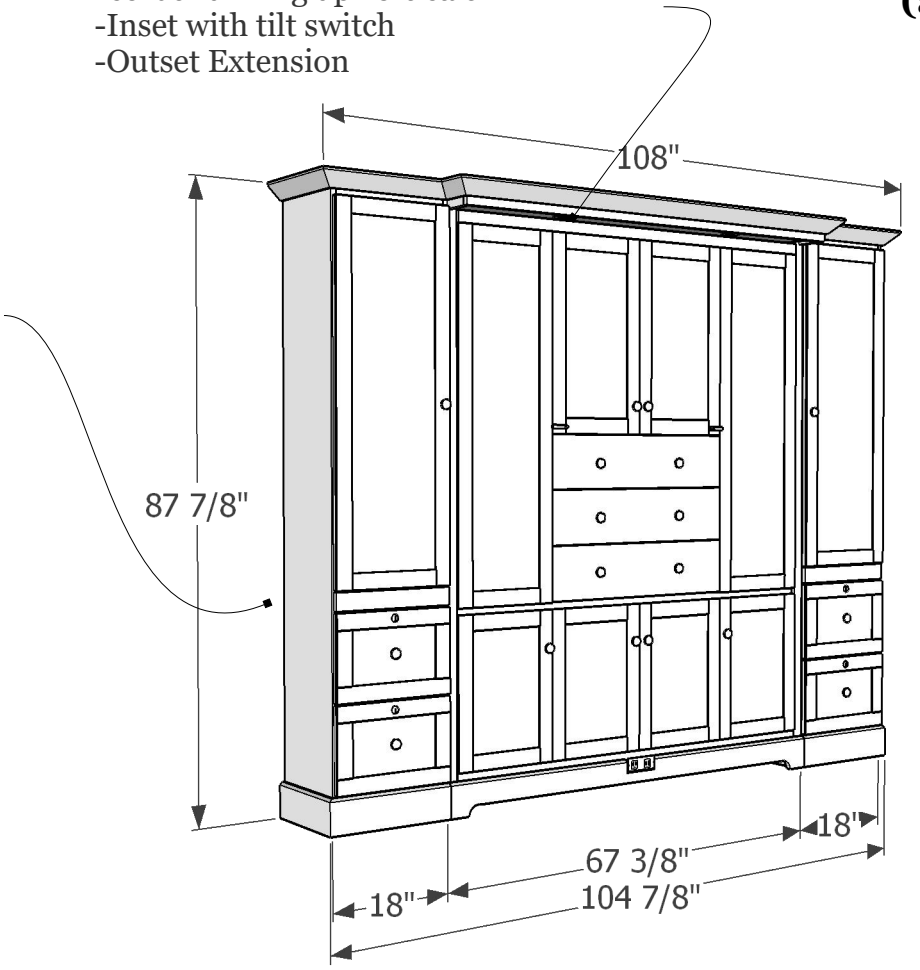

Rail sizes:
14" On draws
10: on trays

Pistons:
Brown:
Queen Vertical (Upper #3 Bottom)

Final Assembly/Boxing	WWBeds Custom Furniture It's like having your own shop! Haley Chance Work Order 1201	REVISIONS 1 11/28/23 Updated hardware, make base cutout larger, 2 removed HB outlet, changed depth to normal, 3 noted tray and modified base 4 Added outlet in base 5 11/28/23 Updated working on headboard