

113-1122	WWBeds Custom Furniture It's like having your own shop!	Drawn By: Chris Davis September 30, 2022

113-1122

Wood: Maple
Color: TBD
Size: Queen Modified
Hardware: Satin Nickel Knobs (4)

Info Page	WWBeds Custom Furniture It's like having your own shop!	REVISIONS
	113-1122	

	MM/DD/YY	REMARKS
1	__/__/__	...
2	__/__/__	...
3	__/__/__	...
4	__/__/__	...
5	__/__/__	...

A

113-1122

Size: Queen Modified

Wood: Maple

Color: TBD

Hardware: Satin Nickel Knobs (4)

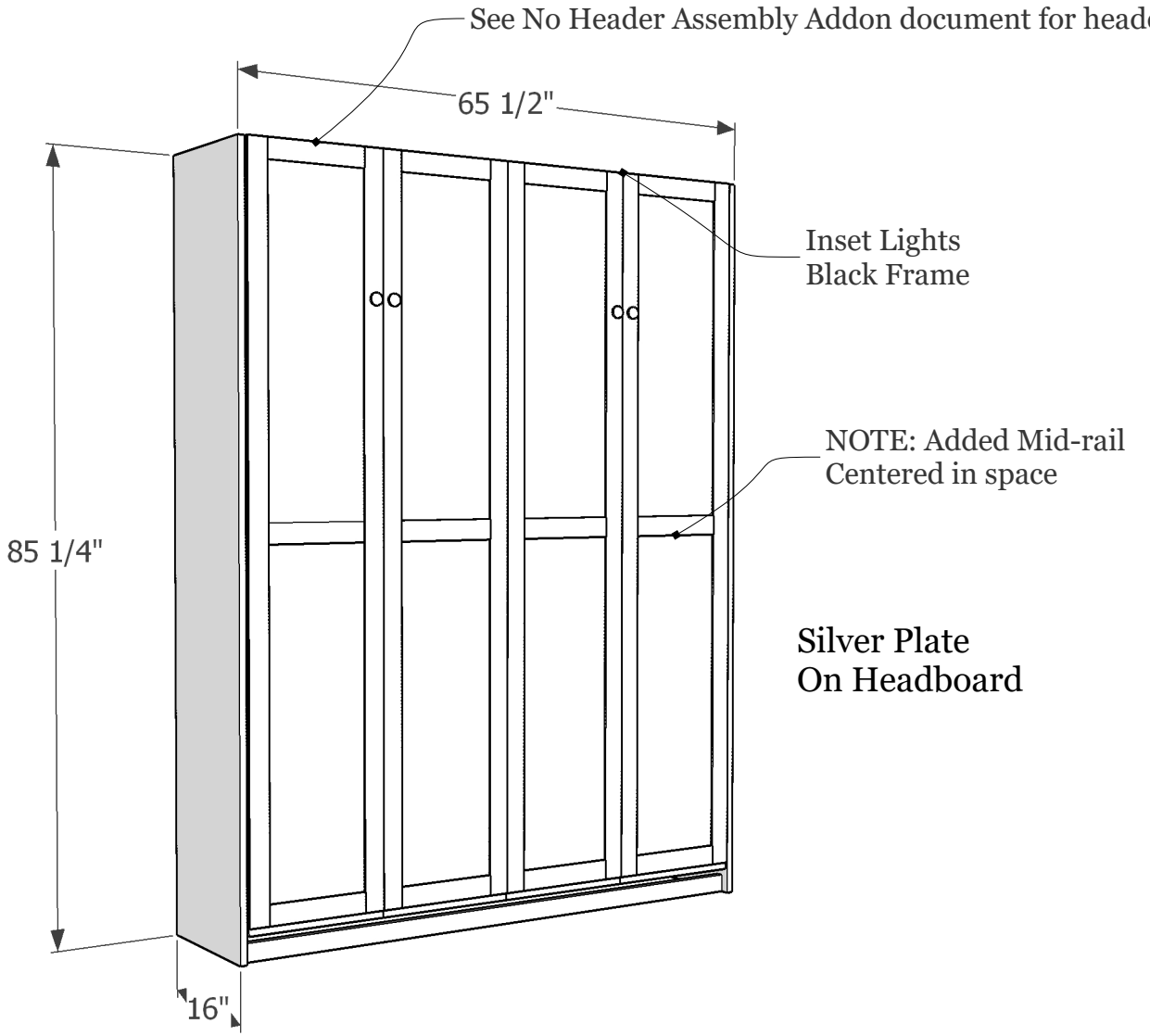

Main Drawing with Measurements	WWBeds Custom Furniture It's like having your own shop! 113-1122	REVISIONS MM/DD/YY / REMARKS 1 __/__/__ ... 2 __/__/__ ... 3 __/__/__ ... 4 __/__/__ ... 5 __/__/__ ...

01

A



Face Open

WWBeds
Custom Furniture
It's like having your own shop!

113-1122

REVISIONS

	MM/DD/YY	REMARKS
1	__/__/__	...
2	__/__/__	...
3	__/__/__	...
4	__/__/__	...
5	__/__/__	...

A 02



Lights

WWBeds
Custom Furniture
It's like having your own shop!

113-1122

REVISIONS

	MM/DD/YY	REMARKS
1	__/__/__	...
2	__/__/__	...
3	__/__/__	...
4	__/__/__	...
5	__/__/__	...

03

A

113-1122

Build Department

Size: Queen Modified **Wood**: Maple **Color:** TBD

- ☐ Scan Invoice to Drawing
- ☐ Note/hightlight Size and features
- ☐ All parts ready (broke and sanded)?
- ☐ Once built check off "main checklist"
- ☐ Is this phase ALL ready for finish

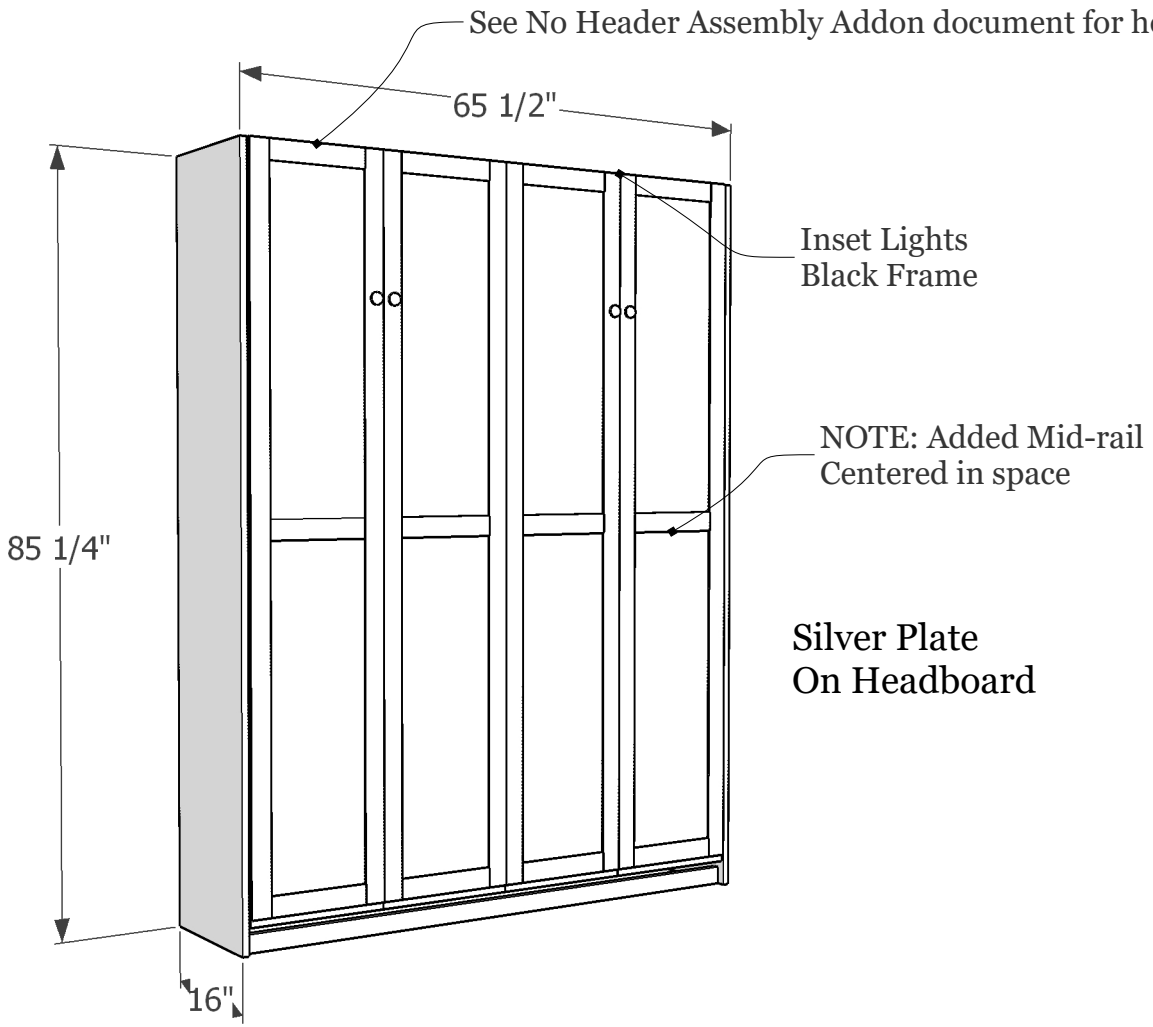

Build Department	WWBeds Custom Furniture It's like having your own shop! 113-1122	REVISIONS MM/DD/YY / REMARKS 1 __/__/__ ... 2 __/__/__ ... 3 __/__/__ ... 4 __/__/__ ... 5 __/__/__ ...

A 04

113-1122

Build Assembly Department

Hardware: Satin Nickel Knobs (4)

Face Standards:
Queen (hole at 16" from top)
Centered left/right on molding.

NOTE UNIQUE POSITION.
4 PCS OF HARDWARE

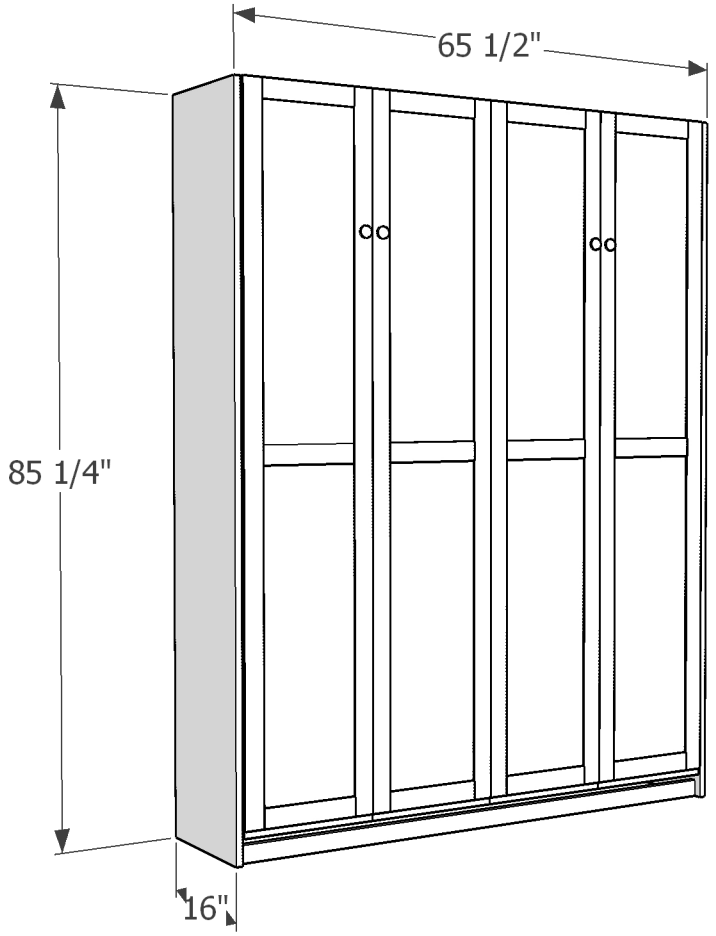

☐ All parts dry (for this current phase)
☐ Drawers Built
☐ Use Assembly Checklist
☐ All Lights working (all touch switches)
☐ All drawers/doors working and adjusted
☐ Any QC issues marked if can not be fixed

Build 2 Department	WWBeds Custom Furniture It's like having your own shop! 113-1122	REVISIONS MM/DD/YY / REMARKS 1 __/__/__ ... 2 __/__/__ ... 3 __/__/__ ... 4 __/__/__ ... 5 __/__/__ ...

05
A

113-1122

Finish Department

Size: Queen Modified **Wood**: Maple **Color:** TBD

- ☐ Color Ordered?
- ☐ Invoice and Drawing the same?
- ☐ All parts ready (checklist)?
- ☐ All parts sprayed?
- ☐ Check parts for QC issues?
- ☐ Guns clean and material put up?

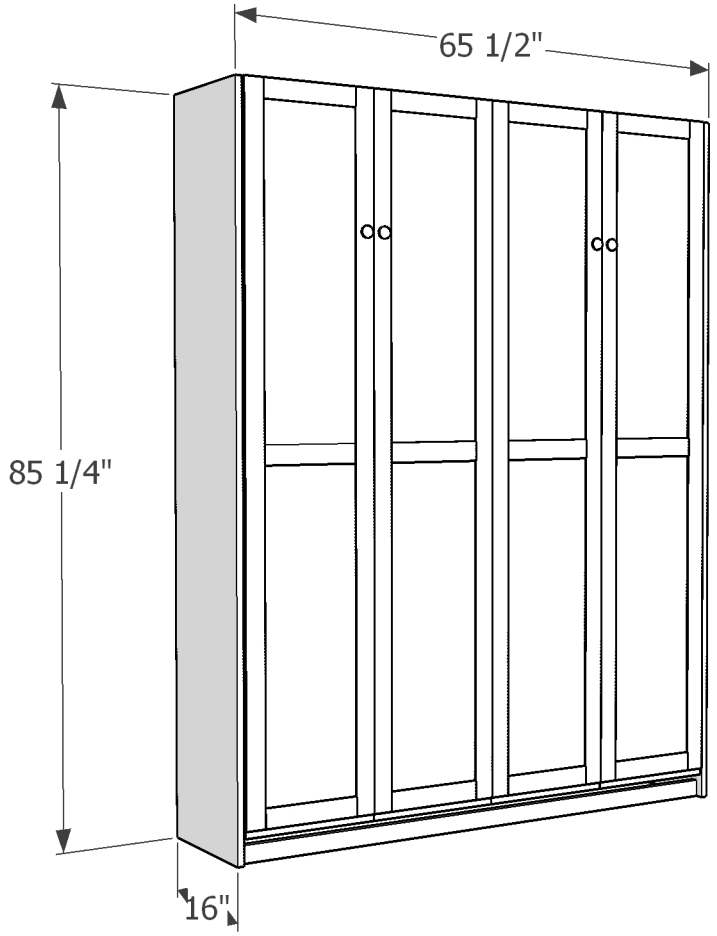

Finish Department	WWBeds Custom Furniture It's like having your own shop! 113-1122	REVISIONS MM/DD/YY / REMARKS 1 __/__/__ ... 2 __/__/__ ... 3 __/__/__ ... 4 __/__/__ ... 5 __/__/__ ...

A 06

113-1122

Final Assembly Department

Hardware: Satin Nickel Knobs (4)

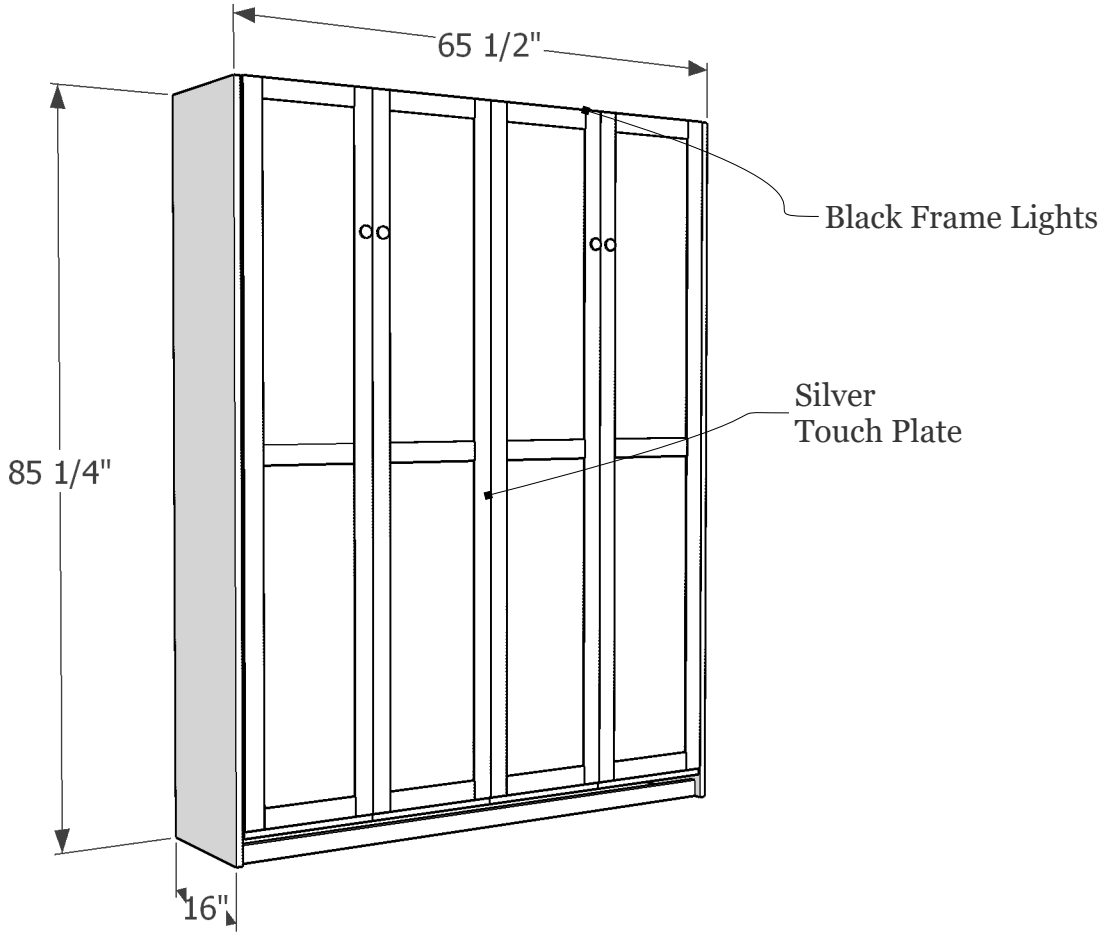

- ☐ All parts dry (for this current phase)
- ☐ Drawers Built
- ☐ Use Assembly Checklist
- ☐ All Lights working (all touch switches)
- ☐ All drawers/doors working and adjusted
- ☐ Any QC issues marked if can not be fixed

Final Assembly/Boxing	WWBeds Custom Furniture It's like having your own shop! 113-1122	REVISIONS 1 __/__/__ ... 2 __/__/__ ... 3 __/__/__ ... 4 __/__/__ ... 5 __/__/__ ...

A 07