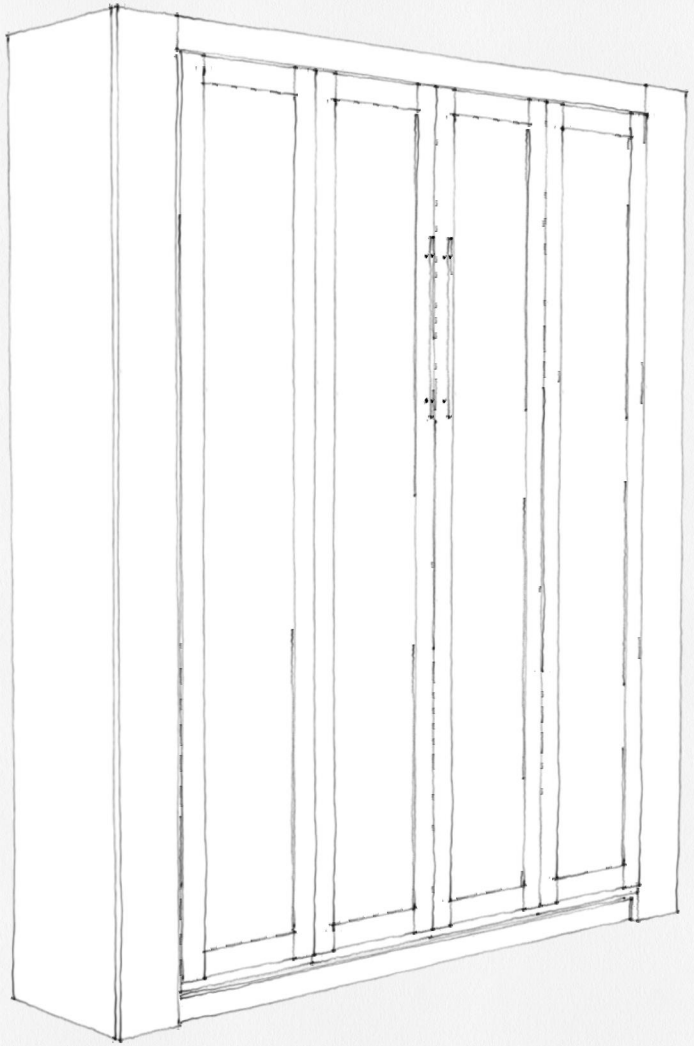

113-0424
Work Order 1202

WWBeds
Custom Furniture
It's like having your own shop!

Drawn By: Chris Davis

Last Modified: January 29, 2024

113-0424
Work Order 1202
Wood: Maple
Color: SW 7507 Stone Lion
Size: Full (with 11" leg)
Hardware: 16" Nickel Bar Pulls



16" Bar Pulls
Nickel

Info Page	WWBeds Custom Furniture It's like having your own shop! 113-0424 Work Order 1202	REVISIONS MM/DD/YY / REMARKS 1 1/29/24 Updated color and wood 2 __/__/__ ... 3 __/__/__ ... 4 __/__/__ ... 5 __/__/__ ...

A 02

113-0424
Work Order 1202

Size: Full (with 11" leg)

Wood: Maple

Color: SW 7507 Stone Lion

Hardware: 16" Nickel Bar Pulls

Builders Notes: Bring down back header and add cleats to side to allow mounting from the inside.

Inset Bookcases (both sides)

Templeton Face

Builders note:
Use 11" leg. Take off the 2" from bottom

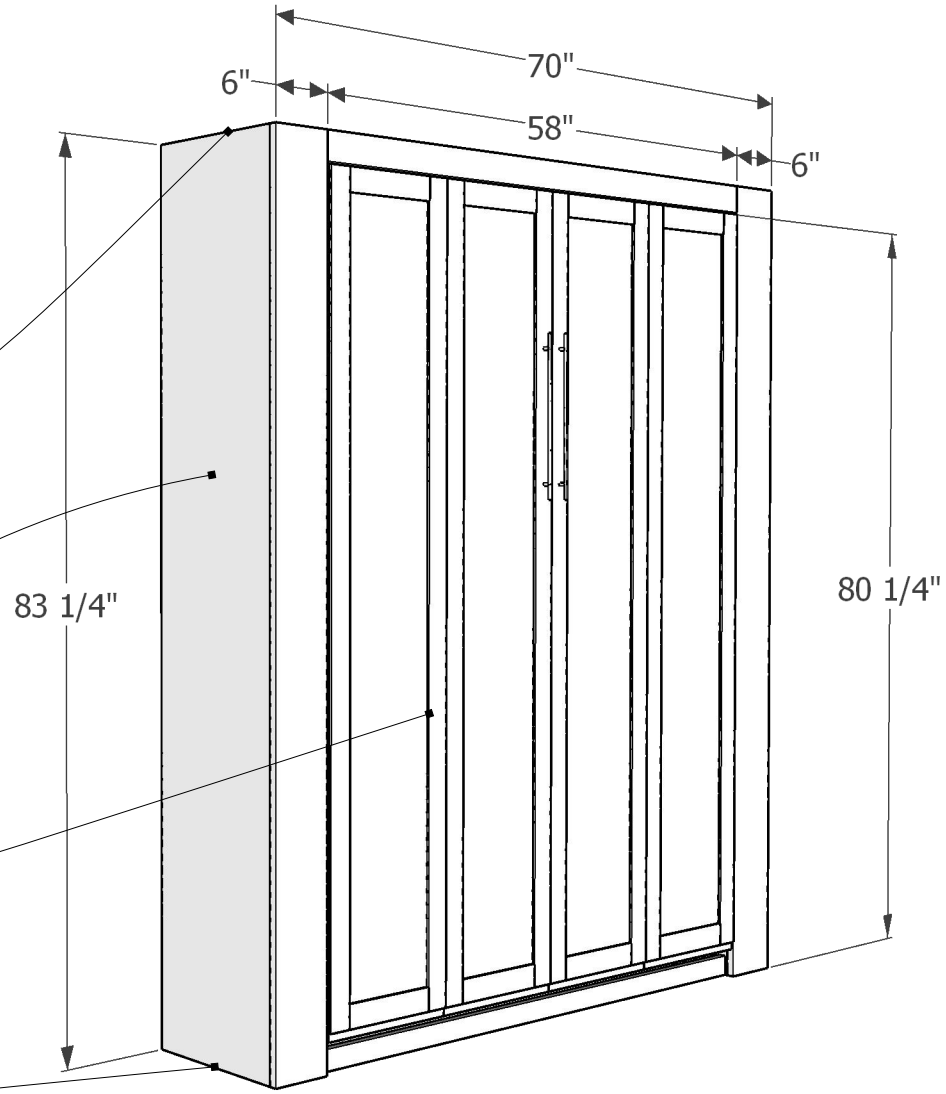

Main Drawing with Measurements

WWBeds Custom Furniture
It's like having your own shop!

113-0424
Work Order 1202

REVISIONS

	MM/DD/YY	REMARKS
1	1/29/24	Updated color and wood
2	__/__/__	...
3	__/__/__	...
4	__/__/__	...
5	__/__/__	...

03
A

113-0424
Work Order 1202
Full (with 11" leg)
SW 7507 Stone Lion

NOTE: Face measures 79 3/4" from the floor, when pullout 7". Face will clear

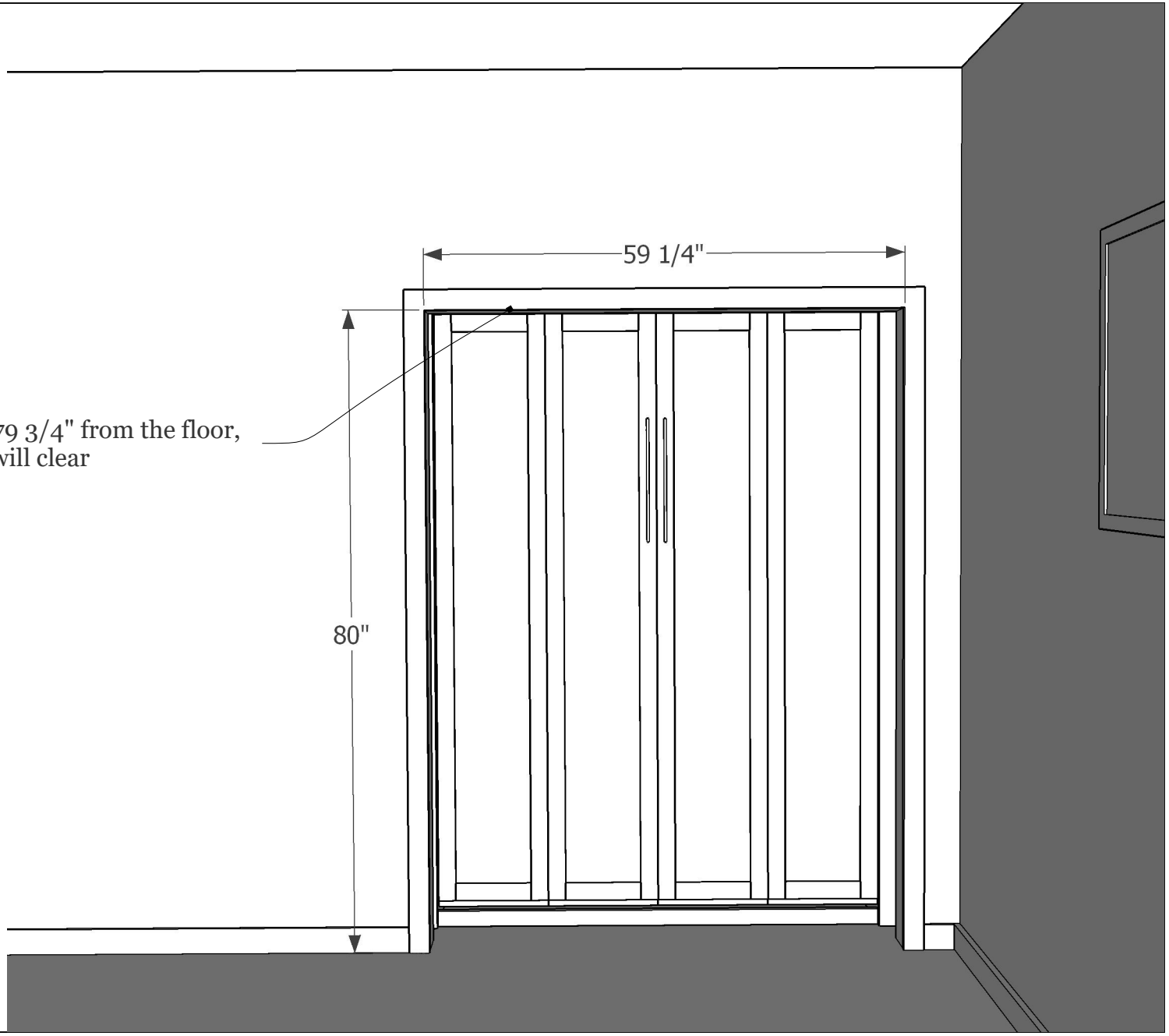

Dimensions Opening

WWBeds
Custom Furniture
It's like having your own shop!

113-0424
Work Order 1202

REVISIONS

	MM/DD/YY	REMARKS
1	1/29/24	Updated color and wood
2	__/__/__	...
3	__/__/__	...
4	__/__/__	...
5	__/__/__	...

A 04



Face Closed

WWBeds
Custom Furniture
It's like having your own shop!

113-0424
Work Order 1202

REVISIONS

	MM/DD/YY	REMARKS
1	1/29/24	Updated color and wood
2	__/__/__	...
3	__/__/__	...
4	__/__/__	...
5	__/__/__	...

A 05



Face Open

WWBeds
Custom Furniture
It's like having your own shop!

113-0424
Work Order 1202

REVISIONS

	MM/DD/YY	REMARKS
1	1/29/24	Updated color and wood
2	__/__/__	...
3	__/__/__	...
4	__/__/__	...
5	__/__/__	...

A 06



Inset Bookcases

WWBeds
Custom Furniture
It's like having your own shop!

113-0424
Work Order 1202

REVISIONS

	MM/DD/YY	REMARKS
1	1/29/24	Updated color and wood
2	__/__/__	...
3	__/__/__	...
4	__/__/__	...
5	__/__/__	...

A 07



Face Open Side

WWBeds
Custom Furniture
It's like having your own shop!

113-0424
Work Order 1202

REVISIONS

	MM/DD/YY	REMARKS
1	1/29/24	Updated color and wood
2	__/__/__	...
3	__/__/__	...
4	__/__/__	...
5	__/__/__	...

A 08

Extras: Murphy Bed Lights

Inset Lights

The Inset lights are LED and are controlled by a touch plate on the headboard. I also add a tilt swith to kill the power when the bed is closed. Cost $225

More on the lights: www.wwbeds.com/murphylights

NOTE: To add this would require an outlet behind headboard.



Extras: Bookcase Lights

Not on your Work Order but we can add lights to the top of each Inset bookcase. They are $60 each. They will be switched with the bed lights.

Cost
-$60 each light.

More on the lights: www.wwbeds.com/murphylights



NOTE: To add this would require an outlet behind headboard.

Extras: Glass Shelves

A great addition where there is bookcase lighting, the glass shelves allow each shelf to lit up. If we add them, we suggest only in the open sections. If there are doors, we typically don't add them.

Added cost: $50/Shelf



Extras: Glass Shelves	WWBeds Custom Furniture It's like having your own shop! 113-0424 Work Order 1202	REVISIONS MM/DD/YY / REMARKS 1 1/29/24 Updated color and wood 2 __/__/__ ... 3 __/__/__ ... 4 __/__/__ ... 5 __/__/__ ...

Extras: Bookcase Charging Station

These outlets are normally placed at the back of the shelf of a regular bookcase, but we can add them to the Inset Bookcases. They come with a 110V outlet. Also charge/power your phone, tablet or MP3 player a standard USB and now a fast charging USB-C (available in white or black)
Cost $100 ea.

More on the outlets: www.wwbeds.com/charging



NOTE: To add this would require an outlet behind headboard.





Extras: Bookcase Charging Station	WWBeds Custom Furniture It's like having your own shop! 113-0424 Work Order 1202	REVISIONS MM/DD/YY / REMARKS 1 1/29/24 Updated color and wood 2 __/__/__ ... 3 __/__/__ ... 4 __/__/__ ... 5 __/__/__ ...

12
A

Extras: Headboard Charging Shelf and Outlet

Add a shelf to the headboard and adding a charging. This are great if you need a 110v plug or USB-C for you phone.

Cost $200 (for upgrading headboard and outlet)

More on the outlets: www.wwbeds.com/charging

NOTE: To add this would require an outlet behind headboard.







Extras: Headboard Charging Shelf and Outlet	WWBeds Custom Furniture It's like having your own shop! 113-0424 Work Order 1202	REVISIONS 1 1/29/24 Updated color and wood 2 __/__/__ ... 3 __/__/__ ... 4 __/__/__ ... 5 __/__/__ ...

13

A

More Extras

More extras can be added to your murphy bed design. Examples of those can be found at:
www.wwbeds.com/murphy-bed-extras



More Extras	WWBeds Custom Furniture It's like having your own shop!	REVISIONS
	113-0424 Work Order 1202	

	MM/DD/YY	REMARKS
1	1/29/24	Updated color and wood
2	__/__/__	...
3	__/__/__	...
4	__/__/__	...
5	__/__/__	...

14

A