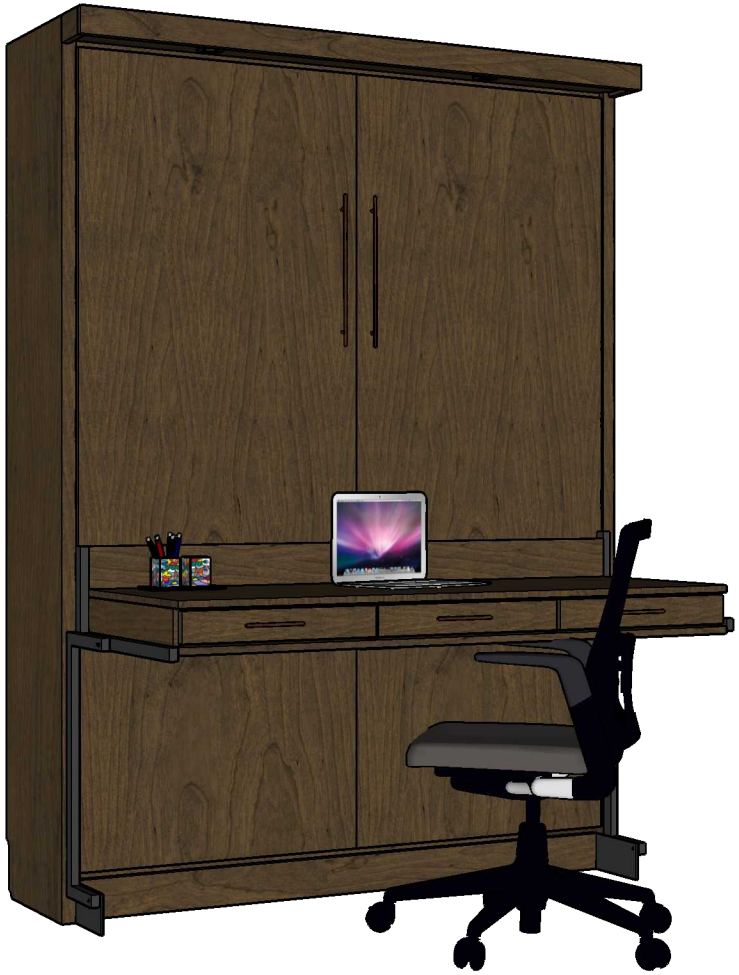

122-0926b
Work Order 5932

WWBeds
Custom Furniture
It's like having your own shop!

Drawn By: Chris Davis

Last Modified: September 14, 2026

122-0926b
Work Order 5932
Wood: Maple
Color: Jacobean
Size: Queen
Hardware: 16" Oil Rubbed Bronze Bar Pulls for the face
6" Oil Rubbed Bronze Bar Pulls everywhere else



16" Bar Pulls
Nickel



6" Bar Pulls
Nickel

Info Page	WWBeds Custom Furniture It's like having your own shop! 122-0926b Work Order 5932	REVISIONS MM/DD/YY / REMARKS 1 9/14/26 Changed color of hardware 2 __/__/__ ... 3 __/__/__ ... 4 __/__/__ ... 5 __/__/__ ...

A 02

122-0926b
Work Order 5932

Size: Queen

Wood: Maple

Color: Jacobean

Hardware: 16" Oil Rubbed Bronze Bar Pulls
for the face
6" Oil Rubbed Bronze Bar Pulls everywhere else

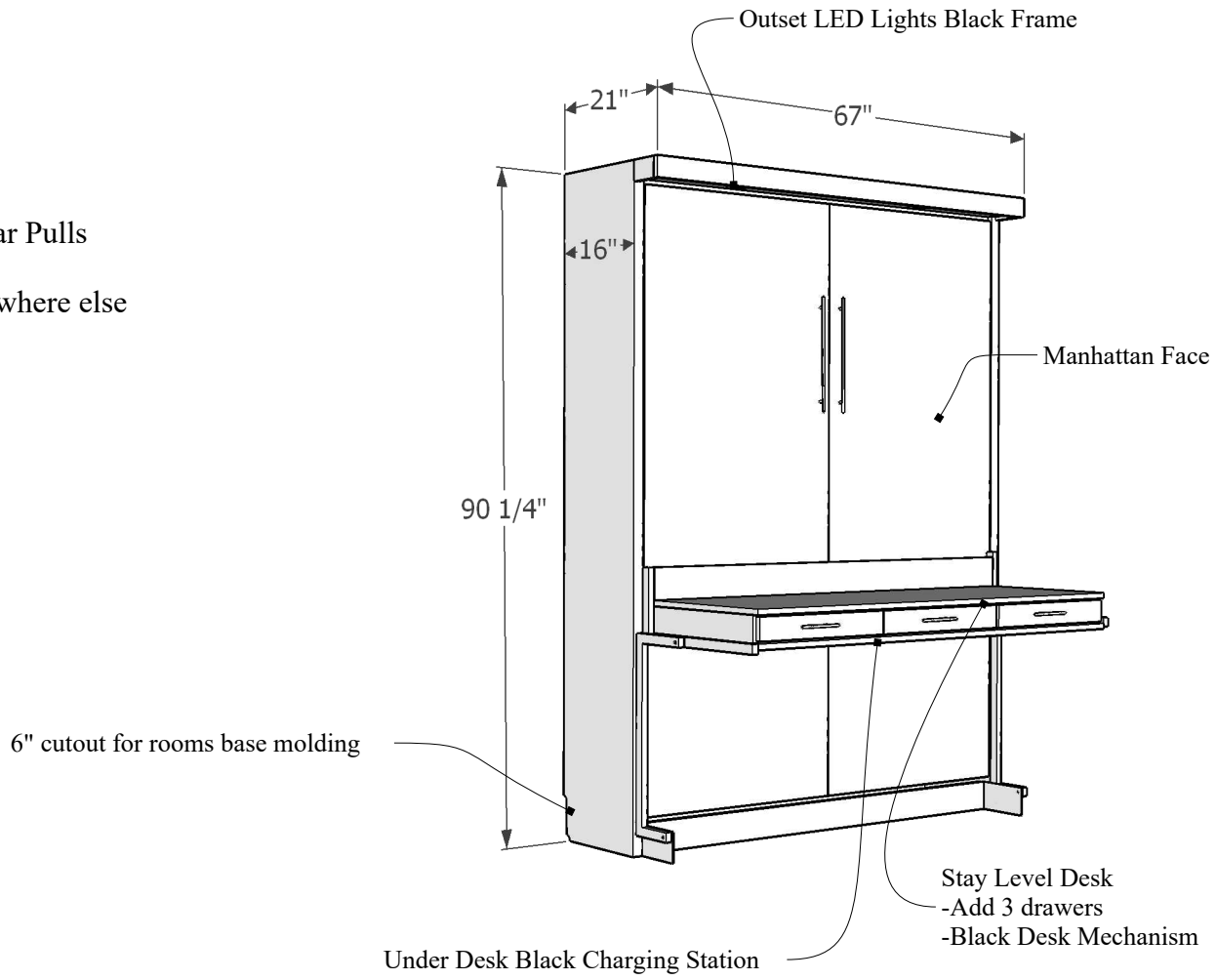

Main Drawing with Measurements	WWBeds Custom Furniture It's like having your own shop! 122-0926b Work Order 5932	REVISIONS MM/DD/YY / REMARKS 1 9/14/26 Changed color of hardware 2 __/__/__ ... 3 __/__/__ ... 4 __/__/__ ... 5 __/__/__ ...

03
A

122-0926b
Work Order 5932
Queen
Jacobean

Depths (spring version)
Bed Depth (main): 16"
Bed Depth (at top): 21"
Stay Level Work Surface: 21 1/4"d
Cabinet plus Desk: 38"d



Drawing Projection

WWBeds
Custom Furniture
It's like having your own shop!

122-0926b
Work Order 5932

REVISIONS

	MM/DD/YY	REMARKS
1	9/14/26	Changed color of hardware
2	__/__/__	...
3	__/__/__	...
4	__/__/__	...
5	__/__/__	...

04
A



Face Closed

WWBeds
Custom Furniture
It's like having your own shop!

122-0926b
Work Order 5932

REVISIONS

	MM/DD/YY	REMARKS
1	9/14/26	Changed color of hardware
2	__/__/__	...
3	__/__/__	...
4	__/__/__	...
5	__/__/__	...

A 05



Face Open

WWBeds
Custom Furniture
It's like having your own shop!

122-0926b
Work Order 5932

REVISIONS

	MM/DD/YY	REMARKS
1	9/14/26	Changed color of hardware
2	__/__/__	...
3	__/__/__	...
4	__/__/__	...
5	__/__/__	...

A 06



Desk

WWBeds
Custom Furniture
It's like having your own shop!

122-0926b
Work Order 5932

REVISIONS

	MM/DD/YY	REMARKS
1	9/14/26	Changed color of hardware
2	__/__/__	...
3	__/__/__	...
4	__/__/__	...
5	__/__/__	...

A 07

Base Molding Cutout



6" high cutout for room's base molding

Base cutout

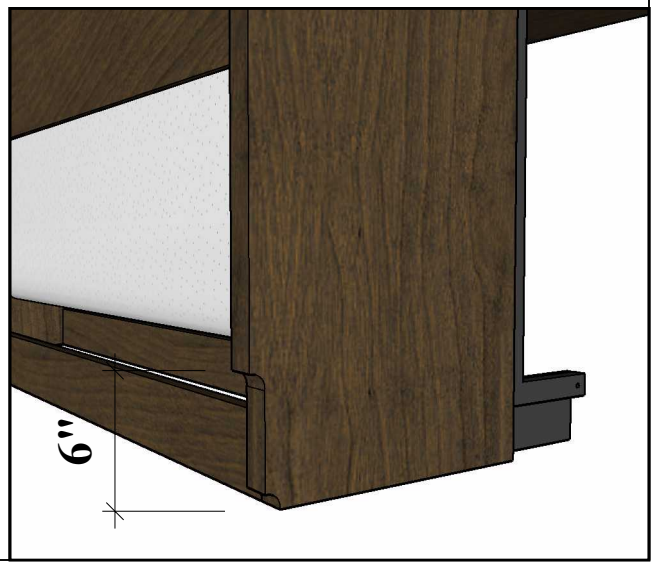

Base Molding Cutout	WWBeds Custom Furniture It's like having your own shop! 122-0926b Work Order 5932	REVISIONS MM/DD/YY / REMARKS 1 9/14/26 Changed color of hardware 2 __/__/__ ... 3 __/__/__ ... 4 __/__/__ ... 5 __/__/__ ...

08
A



Lights

WWBeds
Custom Furniture
It's like having your own shop!

122-0926b
Work Order 5932

REVISIONS

	MM/DD/YY	REMARKS
1	9/14/26	Changed color of hardware
2	__/__/__	...
3	__/__/__	...
4	__/__/__	...
5	__/__/__	...

09
A



Under Desk Charging Station

WWBeds
Custom Furniture
It's like having your own shop!

122-0926b
Work Order 5932

REVISIONS

	MM/DD/YY	REMARKS
1	9/14/26	Changed color of hardware
2	__/__/__	...
3	__/__/__	...
4	__/__/__	...
5	__/__/__	...

10

A



Headboard

WWBeds
Custom Furniture
It's like having your own shop!

122-0926b
Work Order 5932

REVISIONS

	MM/DD/YY	REMARKS
1	9/14/26	Changed color of hardware
2	__/__/__	...
3	__/__/__	...
4	__/__/__	...
5	__/__/__	...

11

A

More Extras

More extras can be added to your murphy bed design. Examples of those can be found at:
www.wwbeds.com/murphy-bed-extras



More Extras	WWBeds Custom Furniture It's like having your own shop! 122-0926b Work Order 5932	REVISIONS MM/DD/YY / REMARKS 1 9/14/26 Changed color of hardware 2 __/__/__ ... 3 __/__/__ ... 4 __/__/__ ... 5 __/__/__ ...

12

A